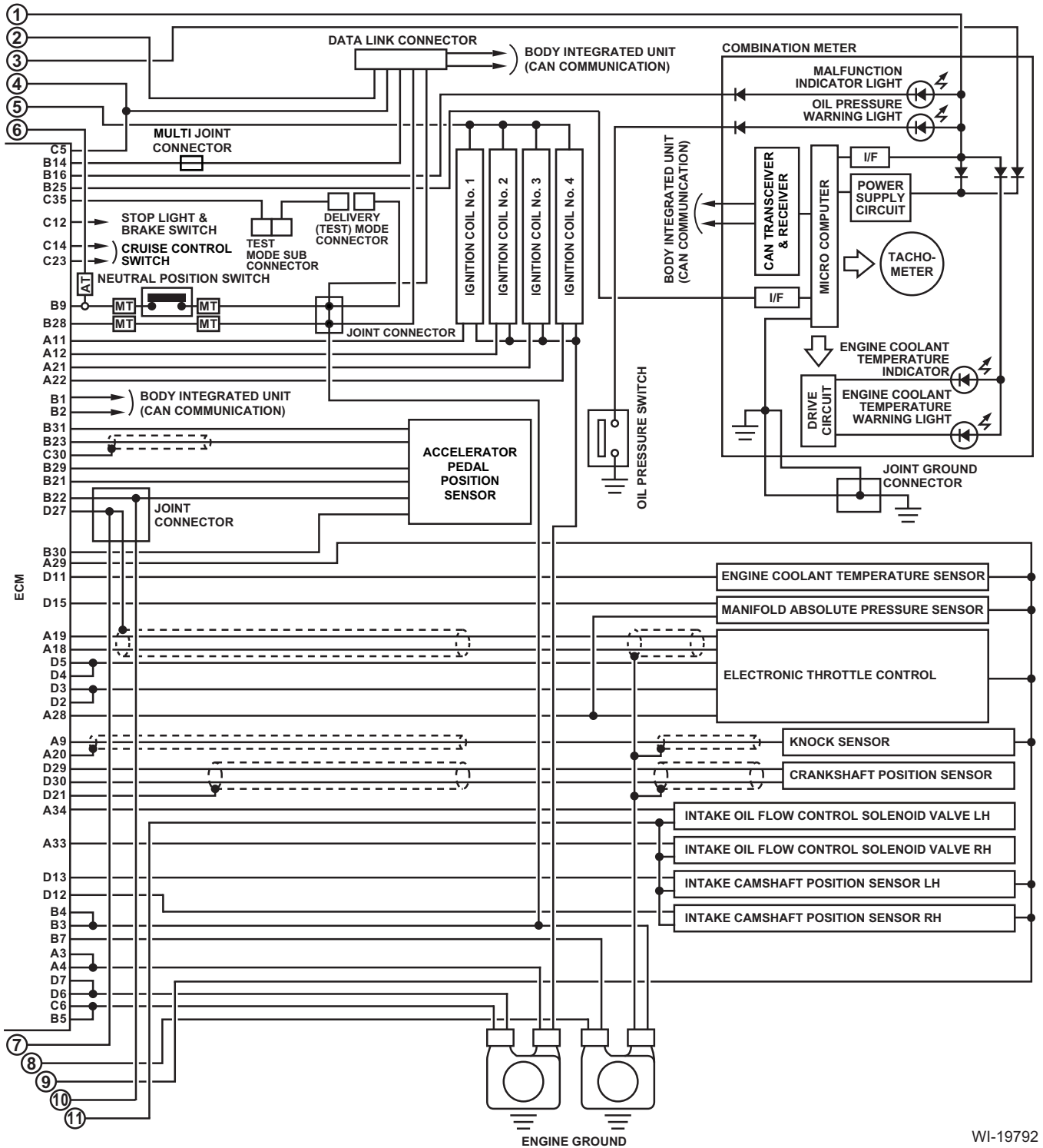
DATA LINK CONNECTOR
BODY INTEGRATED UNIT (CAN COMMUNICATION)
COMBINATION METER
MALFUNCTION INDICATOR LIGHT
OIL PRESSURE WARNING LIGHT
MULTI JOINT CONNECTOR
STOP LIGHT & BRAKE SWITCH
CRUISE CONTROL SWITCH
TEST MODE SUB CONNECTOR
DELIVERY (TEST) MODE CONNECTOR
NEUTRAL POSITION SWITCH
AT
MT
JOINT CONNECTOR
IGNITION COIL No. 1
IGNITION COIL No. 2
IGNITION COIL No. 3
IGNITION COIL No. 4
BODY INTEGRATED UNIT (CAN COMMUNICATION)
CAN TRANSCEIVER & RECEIVER
MICRO COMPUTER
I/F
POWER SUPPLY CIRCUIT
TACHO-METER
ENGINE COOLANT TEMPERATURE INDICATOR
DRIVE CIRCUIT
ENGINE COOLANT TEMPERATURE WARNING LIGHT
JOINT GROUND CONNECTOR
OIL PRESSURE SWITCH
ACCELERATOR PEDAL POSITION SENSOR
JOINT CONNECTOR
ECM
ENGINE COOLANT TEMPERATURE SENSOR
MANIFOLD ABSOLUTE PRESSURE SENSOR
ELECTRONIC THROTTLE CONTROL
KNOCK SENSOR
CRANKSHAFT POSITION SENSOR
INTAKE OIL FLOW CONTROL SOLENOID VALVE LH
INTAKE OIL FLOW CONTROL SOLENOID VALVE RH
INTAKE CAMSHAFT POSITION SENSOR LH
INTAKE CAMSHAFT POSITION SENSOR RH
ENGINE GROUND
WI-19792