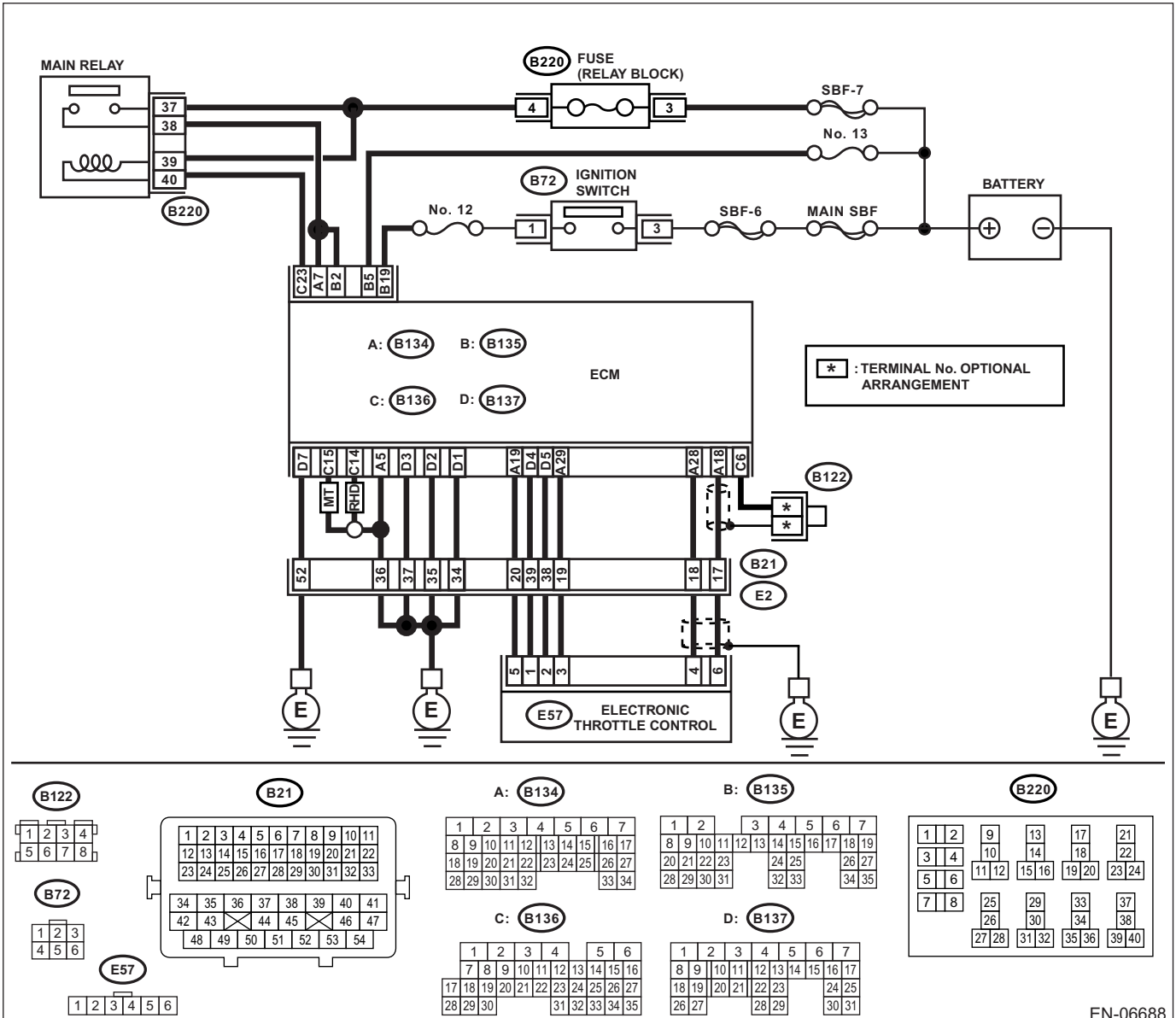
MAIN RELAY
37
38
39
40
B220
B220
FUSE
(RELAY BLOCK)
4
3
SBF-7
No. 13
B72
IGNITION
SWITCH
No. 12
1
3
SBF-6
MAIN SBF
BATTERY
C23
A7
B2
B5
B19
A: B134
B: B135
C: B136
D: B137
ECM
* : TERMINAL No. OPTIONAL ARRANGEMENT
D7
C15
C14
A5
D3
D2
D1
A19
D4
D5
A29
A28
A18
C6
MT
RHD
B122
52
36
37
35
34
20
39
38
19
18
17
B21
E2
5
1
2
3
4
6
E57
ELECTRONIC
THROTTLE CONTROL
E
B122
B21
B72
E57
A: B134
B: B135
B220
C: B136
D: B137

EN-06688