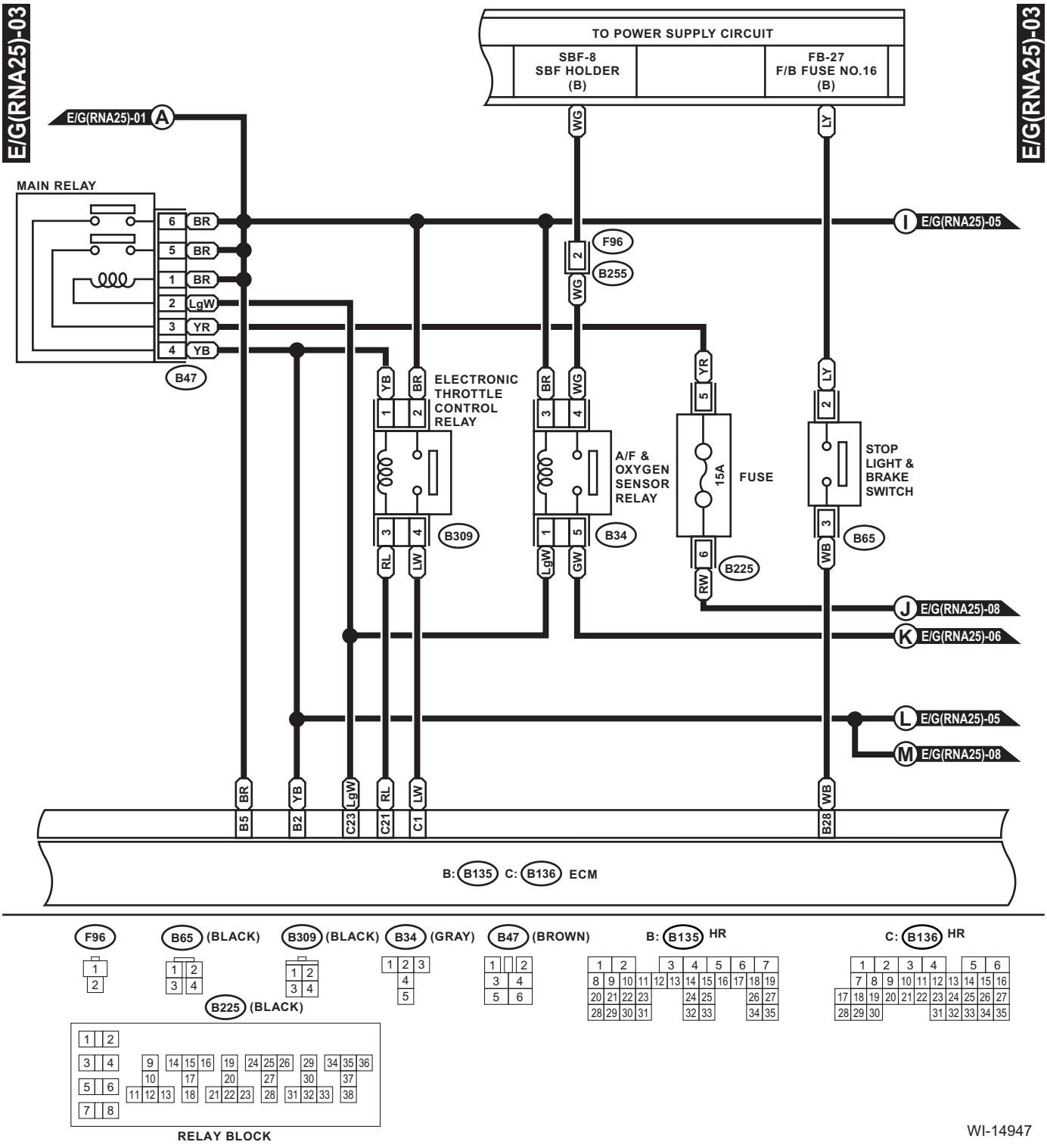
E/G(RNA25)-03
E/G(RNA25)-03
TO POWER SUPPLY CIRCUIT
SBF-8
SBF HOLDER
(B)
FB-27
F/B FUSE NO.16
(B)
E/G(RNA25)-01 A
MAIN RELAY
6 BR
5 BR
1 BR
2 LgW
3 YR
4 YB
B47
I E/G(RNA25)-05
F96
B255
ELECTRONIC
THROTTLE
CONTROL
RELAY
B309
A/F &
OXYGEN
SENSOR
RELAY
B34
FUSE
15A
B225
STOP
LIGHT &
BRAKE
SWITCH
B65
J E/G(RNA25)-08
K E/G(RNA25)-06
L E/G(RNA25)-05
M E/G(RNA25)-08
B5
B2
C23
C21
C1
B28
B: B135 C: B136 ECM
F96
B65 (BLACK)
B309 (BLACK)
B34 (GRAY)
B47 (BROWN)
B: B135 HR
C: B136 HR
B225 (BLACK)
RELAY BLOCK
WI-14947