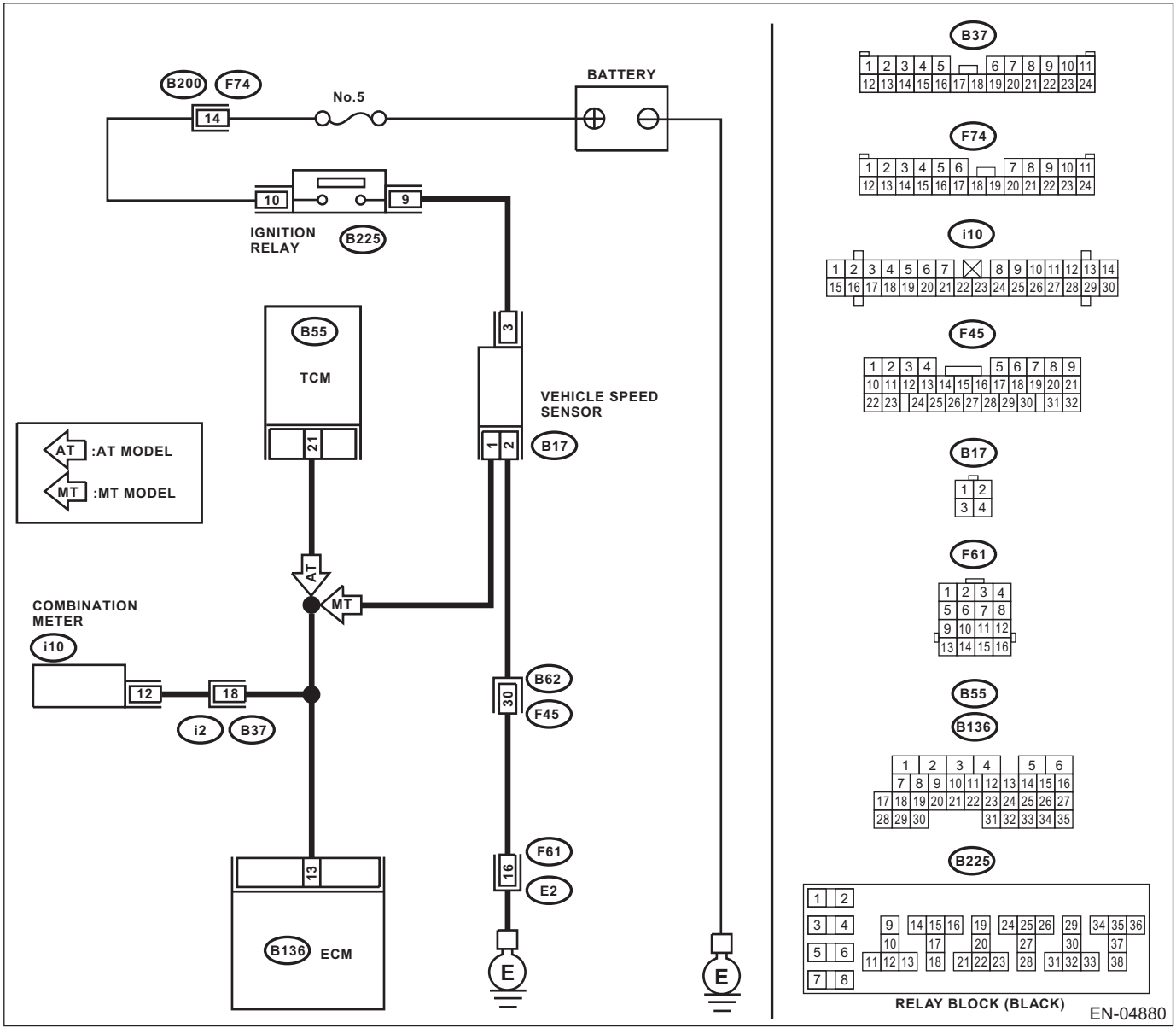
B200
F74
No.5
BATTERY
14
10
9
IGNITION RELAY
B225
B55
TCM
3
VEHICLE SPEED SENSOR
21
1
2
B17
AT :AT MODEL
MT :MT MODEL
AT
MT
COMBINATION METER
i10
12
18
i2
B37
B62
30
F45
F61
16
E2
13
B136
ECM
E
E
B37
F74
i10
F45
B17
F61
B55
B136
B225
RELAY BLOCK (BLACK)
EN-04880