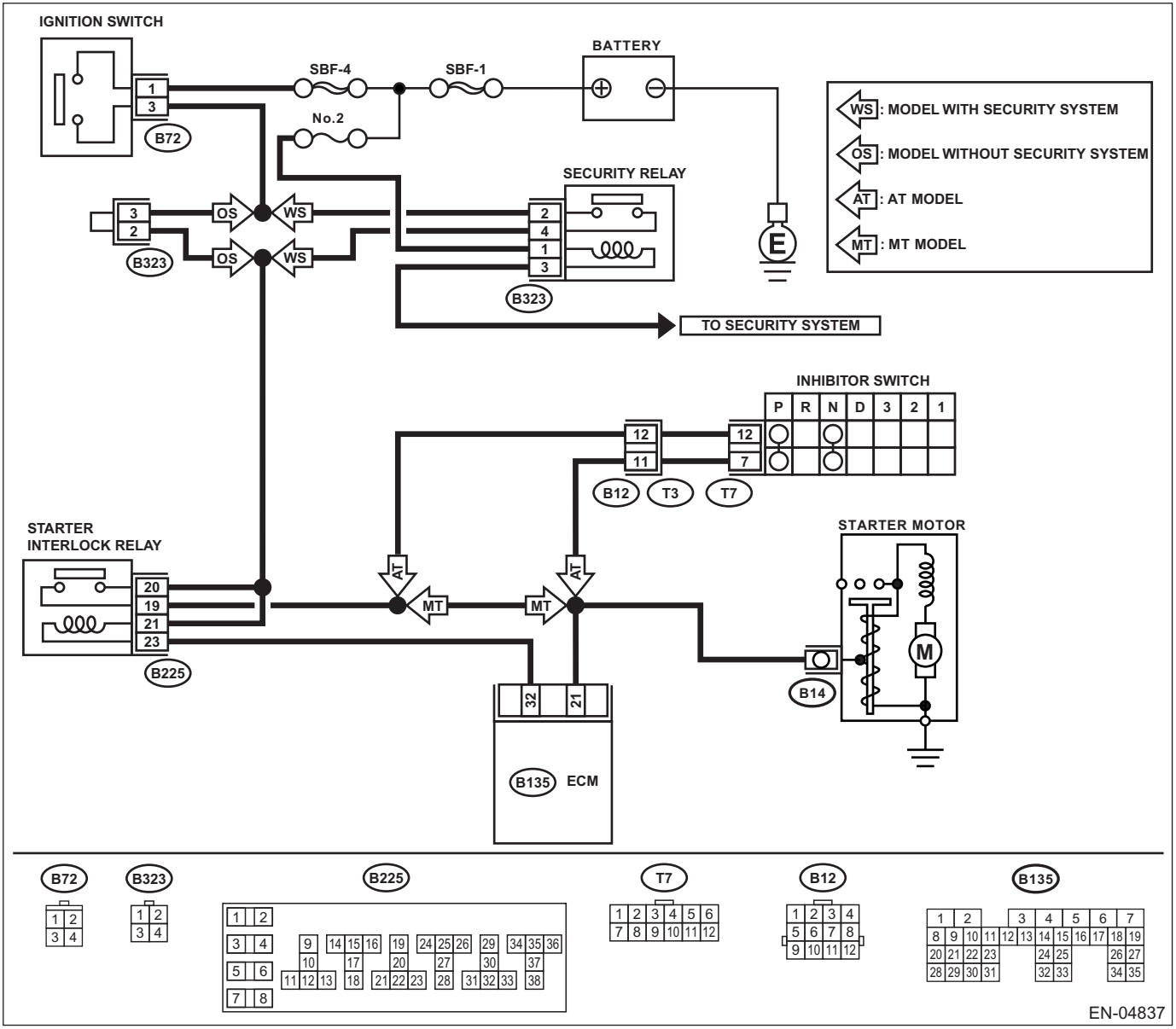
IGNITION SWITCH
1
3
B72
SBF-4
SBF-1
No.2
BATTERY
SECURITY RELAY
3
2
B323
OS
WS
OS
WS
2
4
1
3
B323
E
WS : MODEL WITH SECURITY SYSTEM
OS : MODEL WITHOUT SECURITY SYSTEM
AT : AT MODEL
MT : MT MODEL
TO SECURITY SYSTEM
INHIBITOR SWITCH
P R N D 3 2 1
12
11
B12
T3
12
7
T7
STARTER INTERLOCK RELAY
20
19
21
23
B225
AT
MT
MT
AT
32
21
B135
ECM
STARTER MOTOR
M
B14
B72
1 2
3 4
B323
1 2
3 4
B225
1 2
3 4
5 6
7 8
9 10 11 12 13
14 15 16 17 18
19 20 21 22 23
24 25 26 27 28
29 30 31 32 33
34 35 36 37 38
T7
1 2 3 4 5 6
7 8 9 10 11 12
B12
1 2 3 4
5 6 7 8
9 10 11 12
B135
1 2 3 4 5 6 7
8 9 10 11 12 13 14 15 16 17 18 19
20 21 22 23 24 25 26 27
28 29 30 31 32 33 34 35

EN-04837