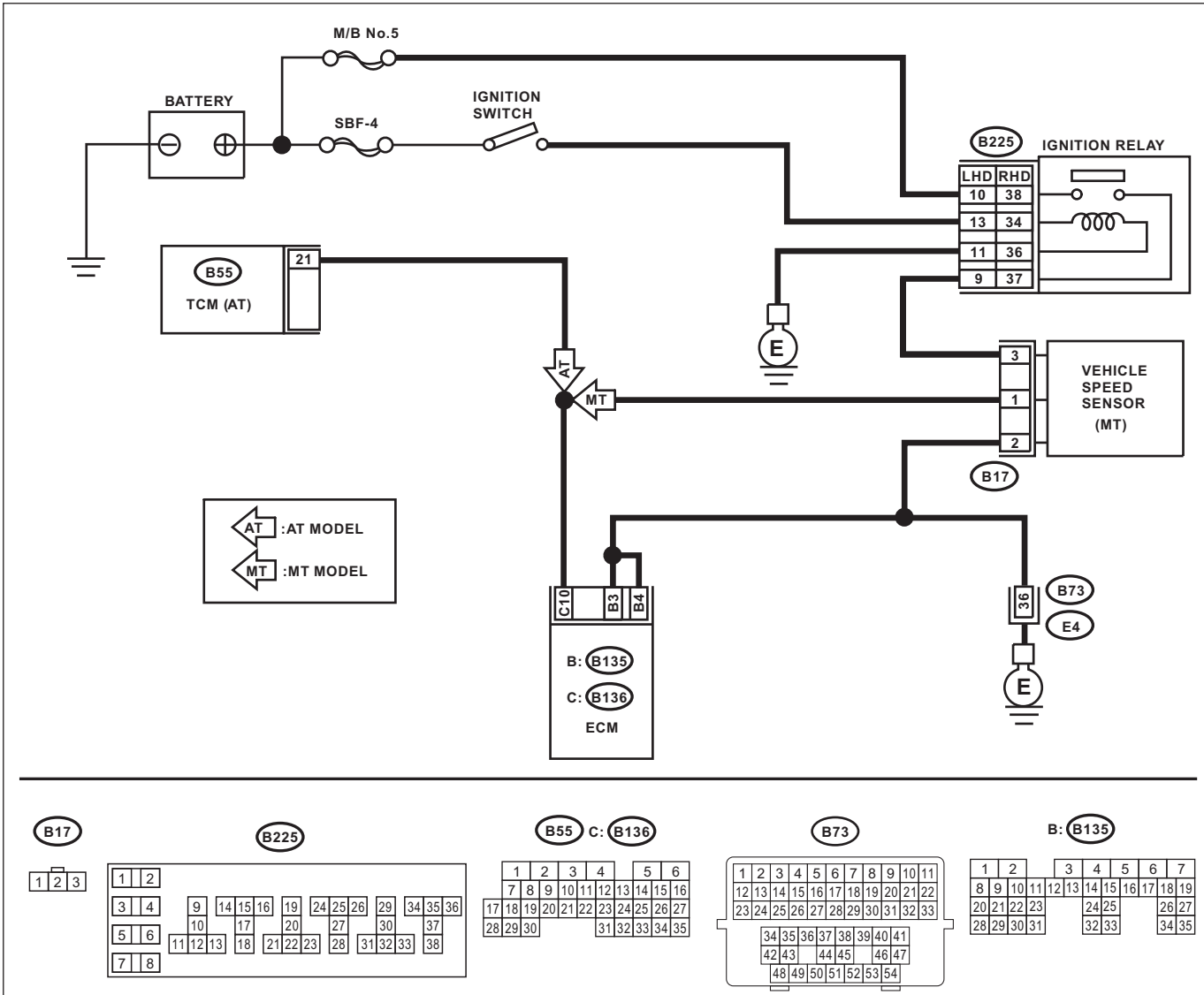
M/B No.5
BATTERY
SBF-4
IGNITION SWITCH
B225
IGNITION RELAY
LHD RHD
10 38
13 34
11 36
9 37
B55
TCM (AT)
21
E
AT
MT
3
1
2
VEHICLE SPEED SENSOR (MT)
B17
AT :AT MODEL
MT :MT MODEL
C10
B3
B4
B: B135
C: B136
ECM
36
B73
E4
E
B17
1 2 3
B225
B55 C: B136
B73
B: B135

CC-00467